KT175-RS-R 175 Series Actuators to Bosch In-Line Pump with Right Hand Rack & RS/RSV Governor

+1 413 233 1888

www.governors-america.com

1 INSTALLATION PROCEDURE - KT175-RS-R

If the Bosch fuel injection pump with a right hand rack (as viewed from the Governor end) is equipped with a mechanical governor, it must be removed. GAC recommends that this modification be performed by a qualified fuel injection service facility. The following procedure lists the general steps required to remove the mechanical governor.

NOTE The mechanical governor will release oil during removal.

1. Remove the rear housing from the mechanical governor and disconnect the governor linkage from the fuel rack. Remove the flyweight assembly with special tools, Bosch part number KDEP-2998 and KDEP-2918, that can be obtained from an authorized Bosch service center (Figure 1-1).
2. Install the rack extension (PN LK175) onto the fuel rack. Insure the link is horizontal and in line with fuel rack. Torque the retaining screw to 5.2 - 5.6 Nm (46 - 50 inch-pounds) (Figure 1-2).
3. Position mounting gasket GA176 onto the cleaned Governor Housing. Apply a light coat of grease onto the face / sealing surface of the forward governor housing to retain gasket in position during assembly.

   Slide the adapter plate PL298 over the rack extension and install the 6 M16x18 flat head screws p/n HW05-704, torque to 5.2 - 5.6 Nm (46 - 50 inch-pounds). Check to make sure the rack moves freely in its bore through its full stop-to-stop travel (Figure 1-3).
4. Once the pump is prepared with KT175-RS-R, Fuel Rack Return Spring, Spring Seats, Shut-Off Plate and the Locking Nut are assembled, the actuator can be installed (Figure 1-4).

2 FIGURE 1-1 REMOVE EXISTING GOVERNOR

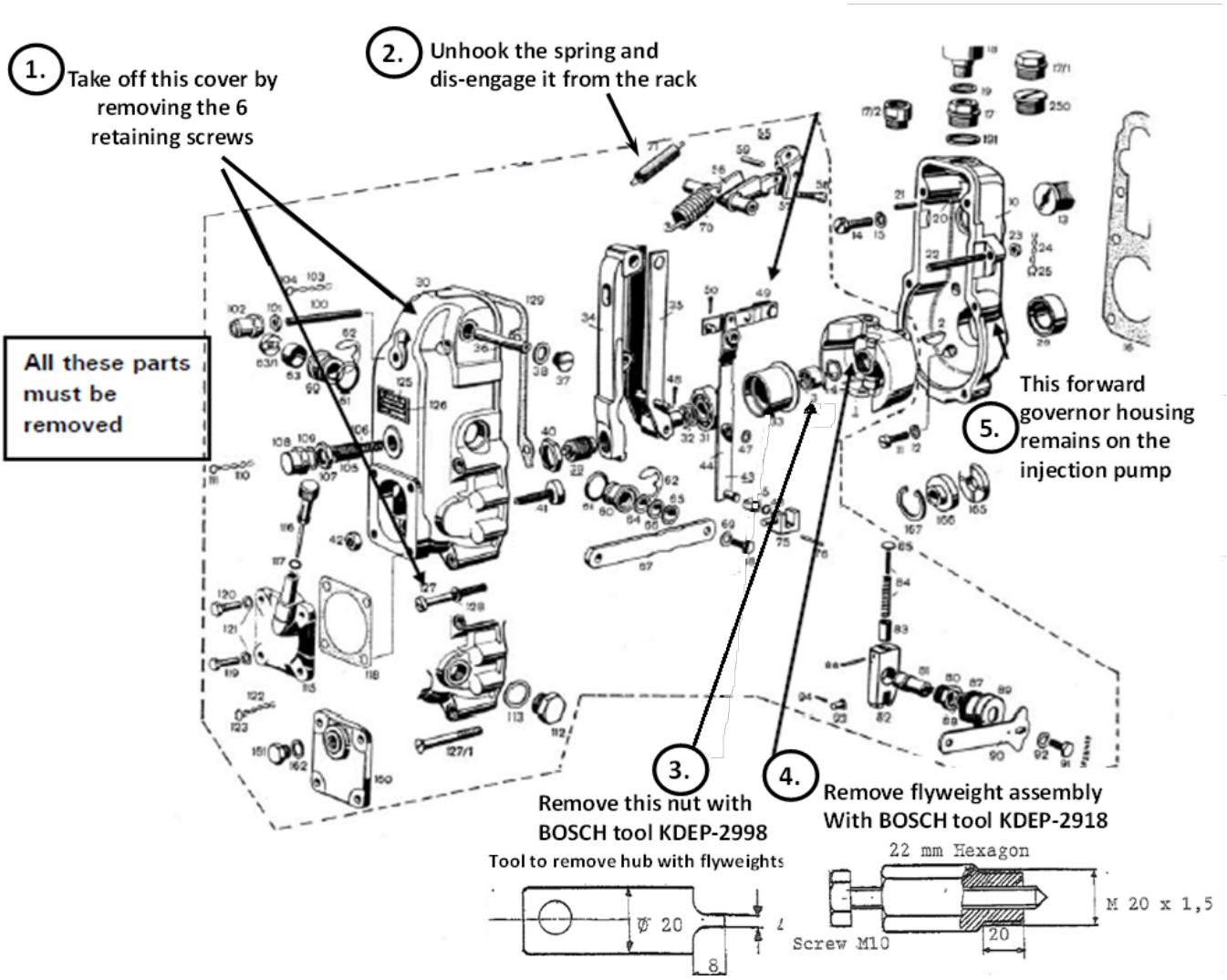

3 KT175-RS-R

FIGURE 1-2 RACK LINK INSTALLED

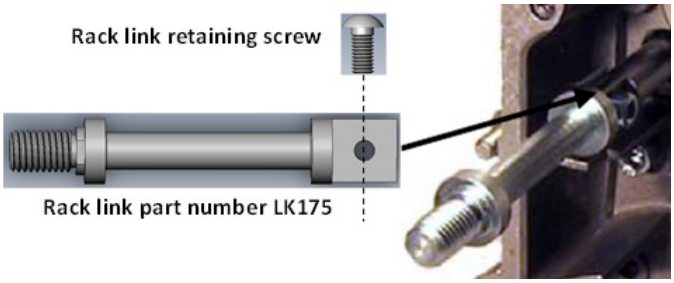

FIGURE 1-3 KT175-RS-R INSTALLED

KT175-RS-R Alternate turning the following mounting screws so that the actuator is aligned properly with the pump adapter plate.

ITEM NO.	PART NUMBER	DESCRIPTION	QTY
1	GA176	Gasket, Plate	1
2	PL298	Plate, Mounting	1
3	LK175	Link, Rack	1
4	HW05-566	Cap screws, M6x16	4
5	HW05-704	Flat Head M6x18	6

4 INSTALLING THE ACTUATOR

All hardware needed to attach the actuator to the pump is located in both kits KT283 and KT289, which are supplied with the actuator. The following installation instructions refer to figures located on the next page.

1. Place the fuel rack return spring (2) over the fuel rack extension (1) against the spring seat (6). Place the spring retainer (3) and shut-off plate (4) with the M10 locking nut (5) over the threads on the Rack extension. See Figure 1-4.
2. Remove the upper actuator cover (8) and O-ring seal (25).
3. Clean the actuator to pump adapter mounting surface so that it is free of any debris.
4. Insert two M6 X 16 mm long screws (15) and spring washers (16) through the lower mounting holes inside the upper actuator cavity. See Figure 1-6.
5. Align the gasket (29) (Figure 1-6) and install it over the two screws and carefully slip the actuator over the fuel rack assembly until the two lower screws just start to meet the fuel pump mounting holes.

IMPORTANT Alternate tightening the following mounting screws so the actuator aligns properly with the pump adapter plate.

6. Insert a ball end hex wrench through the access point located on the operating lever (17) and tighten the left lower mounting screw (15) a few turns. See Figure 1-8.
7. Pull the operating lever outward and slide the ball end hex wrench into the space between the operating lever and the access point in the housing of the actuator and tighten the right lower mounting screw.
8. Once these two screws are fully engaged (do not tighten at this time) into the pump housing, insert two additional M6 X 16 mm long screws (15) and spring washers (16) into the top two mounting holes of the actuator and thread into the pump housing. See Figure 1-6.
9. Torque all four mounting screws to 5-6 N·m (44-53 in-lb)
10. Verify that the fuel rack assembly moves in and out freely inside the upper cavity of the actuator.
11. Carefully loosen screw (11) and (20) over the slotted portion of the adjustment plate so that the operating lever bearing assembly (21) can be moved away from the fuel rack connection link.
12. Ensure that the fuel rack is as far out of the pump as possible.
13. Rotate the operating lever (17) out from the actuator until it stops (the armature of the actuator will be in contact with the lower cover (9) and hold in this position.
14. Rotate the adjustment plate and lever bearing assembly (21) in towards the fuel rack so that contact between the bearing and rack connection link is made. Continue to push in an additional 1 to 2 mm. While holding this position torque the operating lever assembly shaft screw (11) and screw (20) to 4-6 Nm (35-53 in-lb)
15. Inspect the assembly to ensure all screws are tight and the fuel rack moves smoothly without any binding. Push in the fuel rack manually to the full fuel position and rotate the fuel shut off lever (22) to the minimum fuel position to confirm that the shut off lever contacts the metal plate (4) on the fuel rack connector assembly and forces the fuel rack to minimum position.
16. The operating lever has a maximum fuel adjustment set screw (23) which can be used to restrict the fuel rack travel.

NOTE When installed, the cover must not hit the internal operating lever or the maximum fuel adjustment screw. Torque the cover screws to 2-3 N·m (18-27 in-lb) Check for any oil leaks. Lock-wire the lower screws for tamper resistance.

CAUTION Setting high fuel levels may cause the maximum fuel adjusting screw to hit the top cover, which can change the minimum fuel position. When setting fuel levels above 17mm, insure that the adjusting screw does not contact the top cover at minimum level.

With the fuel pump operating on the engine, the maximum fuel setting screw can be adjusted to provide specific horsepower. Once this setting is made torque the locknut (24) on the fuel adjustment screw to 5-6 N·m (44-53 in-lb)

Rotate the manual shut off lever (22) to the stop position and ensure that the fuel is completely shutoff and the engine stops. With the engine shut down, install the upper chamber cover (8) and O-ring seal (25) by first applying Loctite 222 to the six screws (26, 27) provided.

FIGURE 1-4

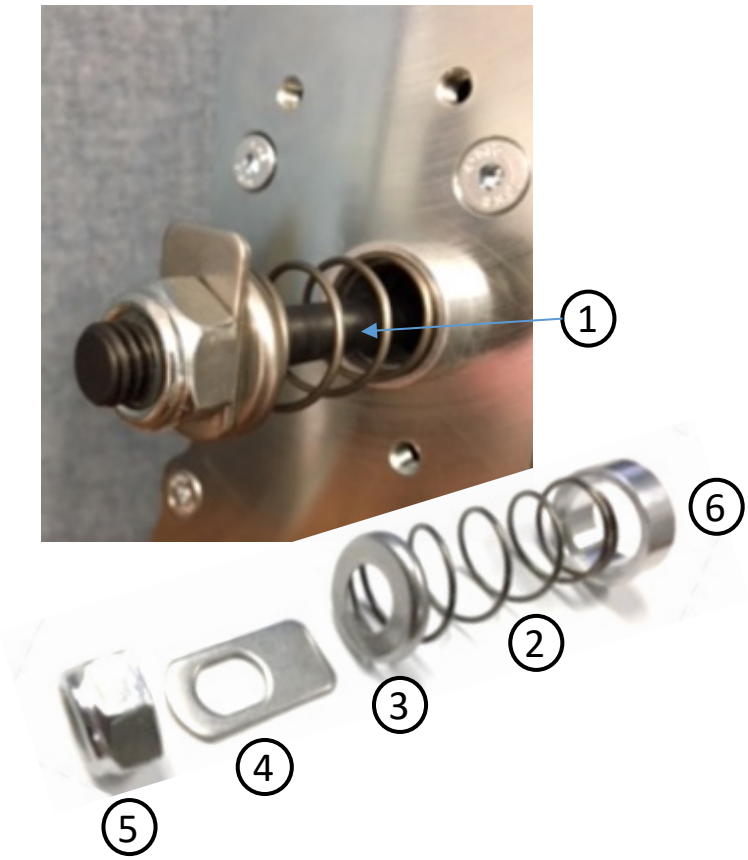

WARNING **The engine should be equipped with an independent shut down device to prevent overspeed which can cause equipment damage and personal injury.**

5 WIRING

The 175 Series Integral Electric Actuator is prewired for 12 or 24VDC operation. Use the included cable harness or make up a cable harness to connect the actuator to the speed control unit.

WARNING Do not use the 175 Series actuator on a 32-volt system. Contact the factory for assistance.

FIGURE 1-5

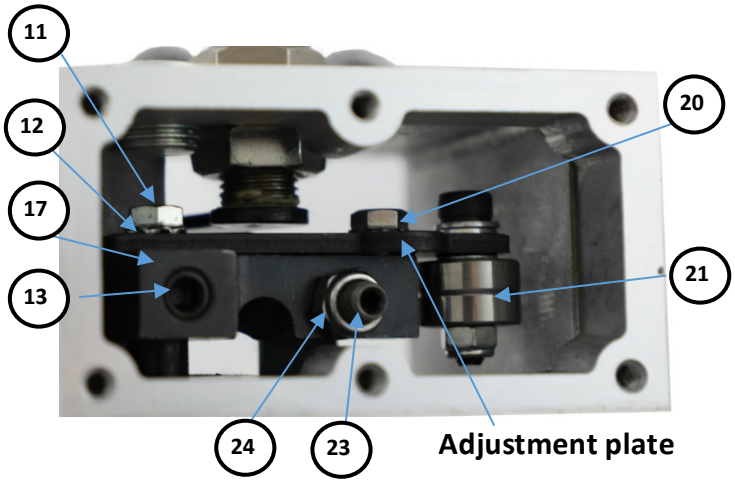

FIGURE 1-6

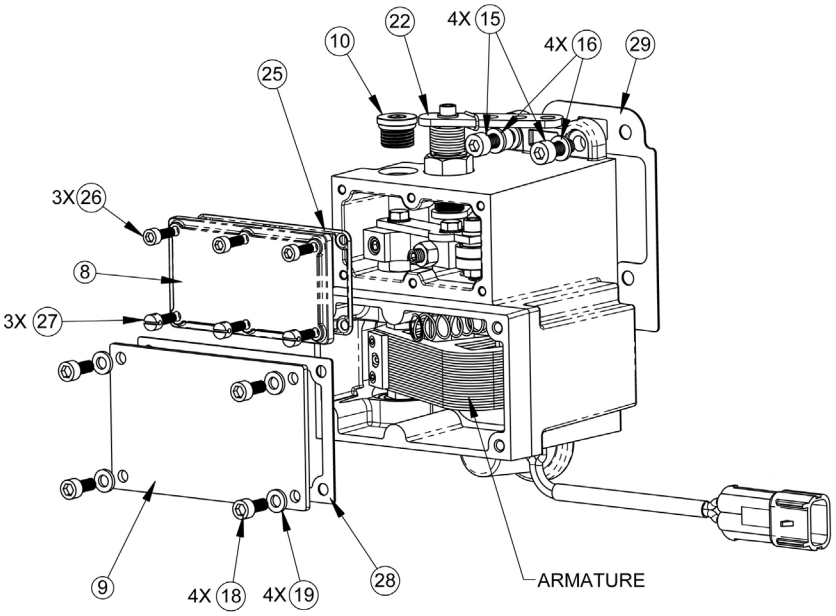

FIGURE 1-7

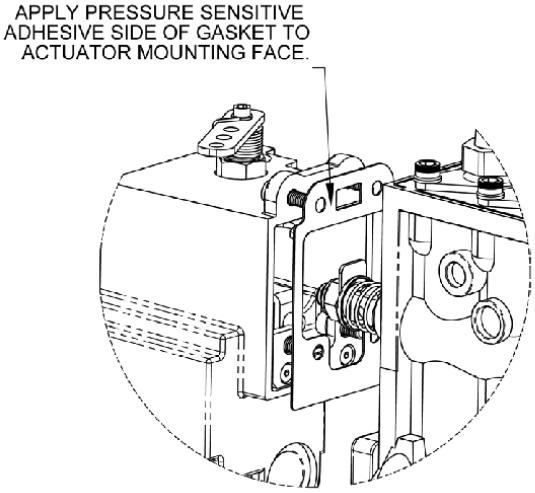

FIGURE 1-8

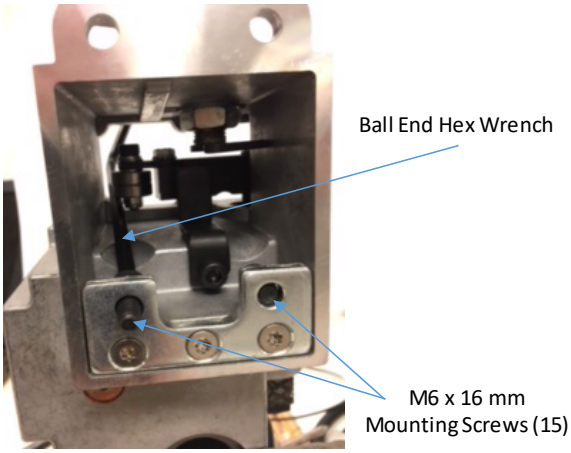

FINISHED PRODUCT